DS-G-REG-1301-0113-03-A*

Model 143-80

Domestic Service Regulator (Models 143-80-1, 143-80-2, 143-80-2HP)



Technical Data

Valve Body	Cast Iron - 125 psig working pressure
Spring and Lower Case	Die-Cast Aluminum
Orifice	Aluminum
Fulcrum Pin	Stainless Steel
Valve Seat	One piece molded Buna-N
Valve Stem	Fiberglass reinforced nylon
Throat/Support/Stem	Acetal insert
Diaphragm Plate	Plated Steel
Diaphragm	Nylon fabric-reinforced Buna-N with full 26 in^2 effective area
Vent and Valve	Polyethylene valve and seat, 1” NPT vent
Operating Temperature	-20° to +150° F (-28.9° to +65.5° C)
Corrosion Protection	Cases dip primed chromate conversion coating, enamel topcoat
Internal Relief Valve	Set to relieve at approximately 7-10” w.c. above normal outlet pressure setting

Dimensions

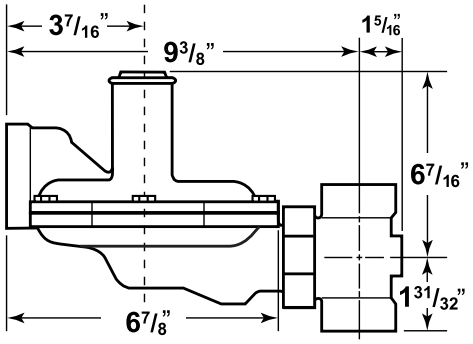

Valve Body Sizes

Straight
3/4” x 3/4”
3/4” x 1”
3/4” x 1-1/4”
1” x 1”
1” x 1-1/4”
1-1/4” x 1-1/4”

Orifice and Maximum Inlet Pressure

Pressure	Size	Part Number
125 psig	1/8”	143-62-023-37
125 psig	3/16”	143-62-023-40
60 psig	1/4”	143-62-023-42
40 psig	5/16”	143-62-023-43
40 psig	3/8”	143-62-023-44
20 psig	1/2”	143-62-023-45
10 psig	5/8”	143-62-023-46

Regulator Spring Chart

Normal Range	Color	Part Number
3.5” - 6.5” w.c.	Red	143-62-021-15
5.0” - 8.5” w.c.	Blue	143-62-021-16
6.0” - 14.0” w.c.	Green	143-62-021-17
12.0” - 28.0” w.c.	Orange	143-62-021-18
0.5 - 2.0 psi	Black/White	143-62-021-22
0.5 - 3.0 psi	Cadmium*	173-62-021-02
2.0 - 6.0 psi	Black*	139-62-021-01

* For high pressure model 143-80-2HP

Relief Valve Performance

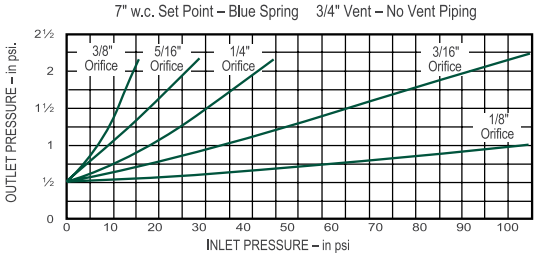

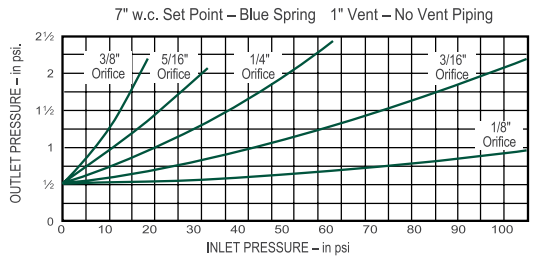

Mounting Positions

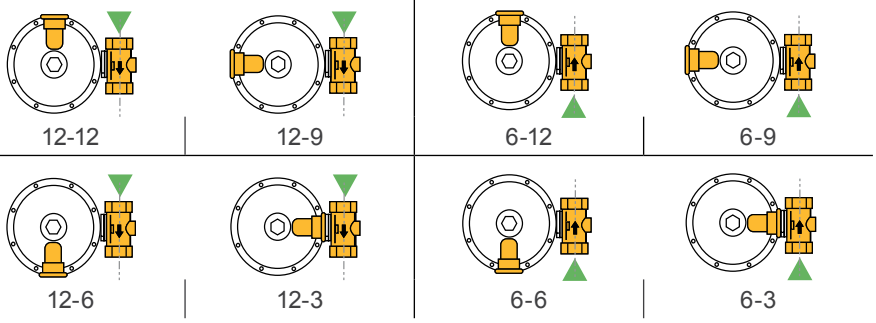

Note:

For outdoor installations, it is recommended that the regulator be installed so that the regulator vent faces downward to avoid the potential for water and other foreign matter entering the regulator and interfering with the proper operation of the regulator.

All products purchased and services performed are subject to Sensus' terms of sale, available at either; http://na.sensus.com/TC/TermsConditions.pdf or 1-800-METER-IT. Sensus reserves the right to modify these terms and conditions in its own discretion without notice to the customer.

This document is for informational purposes only, and SENSUS MAKES NO EXPRESS WARRANTIES IN THIS DOCUMENT. FURTHERMORE, THERE ARE NO IMPLIED WARRANTIES, INCLUDING WITHOUT LIMITATION, WARRANTIES AS TO FITNESS FOR A PARTICULAR PURPOSE AND MERCHANTABILITY. ANY USE OF THE PRODUCTS THAT IS NOT SPECIFICALLY PERMITTED HEREIN IS PROHIBITED.

SENSUS

*This document replaces TD-1301

Model 143-80

Domestic Service Regulator (Models 143-80-1, 143-80-2, 143-80-2HP)

Capacities

SCFH Natural Gas (0.6 specific gravity - 14.65 psia - 60° F)

Pipe Size: 3/4 x 3/4”

Inlet	Orifice						
Psig	**1/8”**	**3/16”**	**1/4”**	**5/16”**	**3/8”**	**1/2”**	**5/8”**
1/2*	-	-	-	-	340	450	510
1*	-	-	-	480	500	510	530
2*	-	-	530	560	570	580	600
3	-	420	600	620	630	650	670
5	250	560	700	720	730	770	790
7.5	310	700	840	860	880	900	900
10	370	830	950	970	1000	1020	1020
20	530	1200	1220	1240	1250	1270	-
40	860	1570	1330	1340	1450	-	-
60	1200	1660	1520	-	-	-	-
80	1500	1710	-	-	-	-	-
125	1800	1900	-	-	-	-	-

Pipe Size: 3/4” x 1” and 1” x 1”

Inlet	Orifice						
Psig	**1/8”**	**3/16”**	**1/4”**	**5/16”**	**3/8”**	**1/2”**	**5/8”**
1/2*	-	-	-	-	350	460	520
1*	-	-	-	480	550	600	650
2*	-	-	530	700	840	880	780
3	-	420	650	870	1000	920	810
5	250	580	890	1120	1160	950	970
7.5	310	700	1140	1340	1270	1140	1060
10	370	840	1360	1500	1330	1200	1180
20	530	1230	2000	1600	1480	1400	-
40	860	1700	2000	1640	1900	-	-
60	1200	1900	2000	-	-	-	-
80	1540	2000	-	-	-	-	-
125	2100	2100	-	-	-	-	-

Pipe Size: 3/4” x 1-1/4”; 1” x 1-1/4”; 1-1/4” x 1-1/4”

Inlet	Orifice						
Psig	**1/8”**	**3/16”**	**1/4”**	**5/16”**	**3/8”**	**1/2”**	**5/8”**
1/2*	-	-	-	-	350	460	520
1*	-	-	-	480	550	680	760
2*	-	-	530	700	840	1020	1030
3	-	420	650	870	1030	1200	1050
5	250	580	890	1180	1350	1490	1060
7.5	310	700	1140	1500	1610	1580	1060
10	370	840	1360	1700	1710	1800	1180
20	630	1230	1600	1800	1900	1900	-
40	860	1800	2200	1900	2000	-	-
60	1200	2100	2400	-	-	-	-
80	1550	2200	-	-	-	-	-
125	2250	2400	-	-	-	-	-

NOTES:

Orifice Outlet Pressure variations:

- Red & Blue Springs 1” w.c. droop
- Orange Spring 3” w.c. droop
- Green Spring 2” w.c. droop
- Black Spring 10% droop

*The 1/2, 1, and 2 psig inlet pressures apply only to Red and Blue springs.

Note: Figures highlighted in each column indicate maximum capacity for each orifice at recommended pressure within the optimum performance range.

This performance data is based on normal testing at 70° F flowing temperature. Changes in performance can occur at extreme low flowing temperatures.

Calculations for Other Gases

Type	Sp. Gravity	Corr. Factor
Air	1.00	0.77
Propane	1.53	0.63
1350 BTU Propane/Air	1.20	0.71
Nitrogen	0.97	0.79
Dry Carbon Dioxide	1.52	0.63

For other non-corrosive gases $\sqrt{\frac{0.60}{\text{Specific Gravity of the Gas}}}$

Full Open Capacity Calculations

Formula 1: For $\frac{P_1}{P_0}$ ***less than*** 1.894)

$$Q = K\sqrt{P_0(P_1-P_0)}$$

Formula 2: For $\frac{P_1}{P_0}$ ***greater than*** 1.894)

$$Q = \frac{KP_1}{2}$$

Where:

Q = max. capacity of regulator (in SCFH of 0.6 specific gravity natural gas)

K = the regulator constant from the table below

5/8”	1/2”	3/8”	5/16”	1/4”	3/16”	1/8”
820	520	292	206	132	74	33

P_1 = absolute inlet pressure (psia)

P_2 = absolute outlet pressure (psia)

© 2012 Sensus

805 Liberty Boulevard
DuBois, PA 15801
1-800-375-8875

For more information, visit us at sensus.com/gas