Data sheet



Ignition Units

EBI4 HP series

Description

The EBI4 HP unit series is specially designed for applications where High Power ignition is required. EBI4 HPM is a 2-pole version with secondary midpoint grounded. EBI HP1P is a 1-pole version for ignition between one electrode and frame. The units are characterized by a very powerful spark, capable of igniting large capacity oil and gas burners. They may also be used in applications where high ignition performance and reliability are required.

Features & Benefits

- 1- or 2-pole ignition
- Low power consumption due to high efficiency (new technology)
- Earth connection through the primary cable
- Same dimensions and flexible mounting as the well-known EBI series
- CE-marking in accordance with the direc- tives: EMC, LVD, RoHs EBI4 HPM
- Oil and gas burners requiring high power ignition
- 33% ED at 60°C
- Top or front connection for secondary cables
- 230 V EBI4 HP1P

Applications

- Oil and gas burners requiring high power ignition
- Oil and gas burners requiring high power ignition

Product code numbers

Type	Housing	Supply voltage [V] AC	Code number
EBI4 HPM	Standard	230	052F4032
EBI4 HPM	Special	230	052F4033
EBI4 HP 1P	Standard	230	052F4046
EBI4 HP 1P	Standard	230	052F4049
EBI4 HPM	Standard	230	052F4232
EBI4 HPM	Special	230	052F4233
EBI4 HP 1P	Standard	230	052F4249

Functions

EBI4 HPM

- Oil and gas burners requiring high power ignition
- 33% ED at 60°C
- Top or front connection for secondary cables
- 230 V

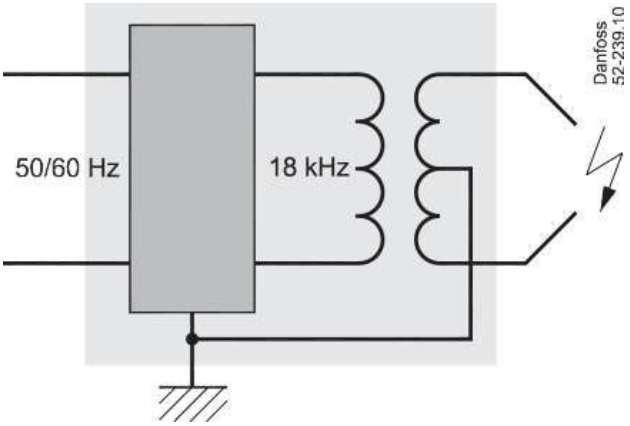

EBI4 HP1P

- Oil and gas burners requiring high power ignition
- 33% ED at 60°C
- Top or front connection for secondary cables
- 230 V

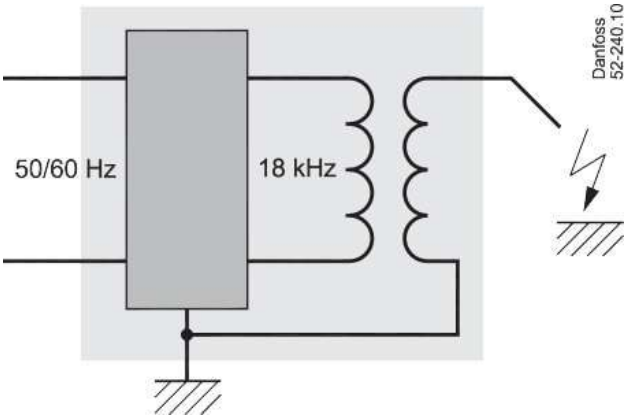

Product details

General data

Type	EBI4 HPM	EBI4 HP1P
Mains connection	230 V - 0.4 A - 50/60 Hz - 90 VA	
Working range	187-255 V	
Main fuse	10 A	
Secondary connection* Short circuit current (rms) Frequency	2 × 7.5 kV 48 mA 18 kHz	12 kV 48 mA 18 kHz
ED % in 3 min.	33% at 60°C	
Ambient temperature	-10 to +60°C	
Storage temperature	-25 to +85°C	
Enclosure	IP 40	
Primary connection	3 × 0.5 mm^2 cable with special plug 3 × 0.75 mm^2 cable with standard AMP connection	
Secondary connections	2 × Ø4 mm plugs	1 × Ø4 mm plugs
Earthing	Through the primary cable	
Distance between electrodes	Recommended 2.5 mm to 5 mm	
Weight	300 g	

* Avoid use of divergent electrodes due to risk of electrical cable break down and too high ignition voltage.

Design

EBI4 HPM	EBI4 HP1P	a: Left terminal b: Right terminal c: Earth connection
a+b+c	b+c	

Dimensions & weights

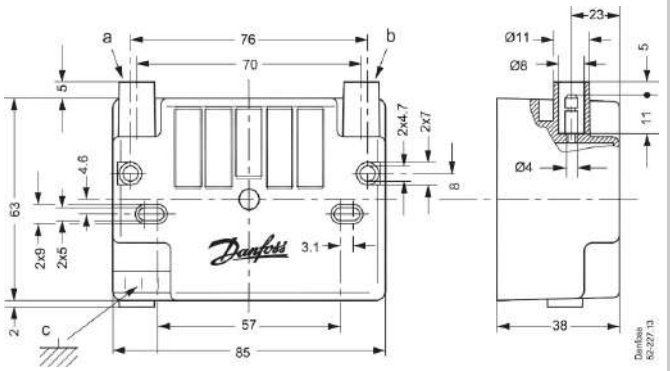

With secondary front connection

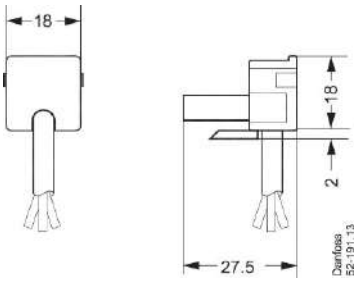

Primary plug

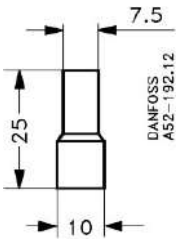

Bush secondary

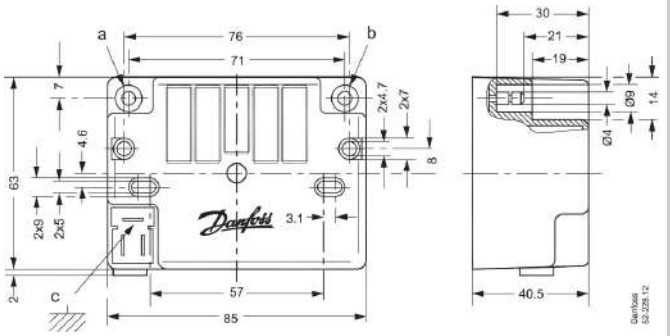

With secondary top connection

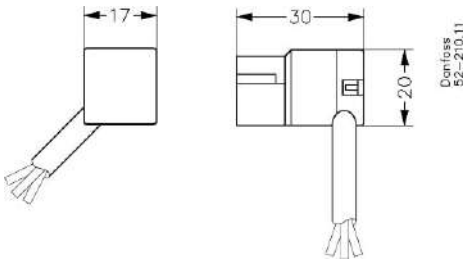

Primary plug

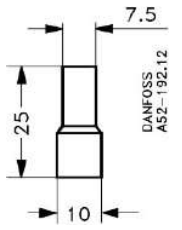

Bush secondary

Weight	EBI4 HPM		EBI4 HP1P
	Gross weight	0.31 kg	0.344 kg
	Net weight	0.296 kg	0.296 kg
	Volumne	0.402 Liter	0.402 Liter

Certificates, declarations and approvals

The list contains all certificates, declarations, and approvals for this product type. Individual code number may have some or all of these approvals, and certain local approvals may not appear on the list.

When you click on the link you will be directed to the latest version of the 'Declaration of Conformity'. Products developed and sold before this date of issue conform to the directives/standards in force at the time of their sale.

Approval type	Title	Certification body	Approval topic
Manufacturer's Declaration	Danfoss MD MA 052F.08	Danfoss	EU RoHS
EU-UK Declaration	Danfoss EU-UK 052F.07	Danfoss	EMC
Export Control Declaration	Ignition units	Danfoss	

Contact details

Online support

Danfoss offers a wide range of support along with our products, including digital information, software, mobile apps and expert guidance. See the possibilities below.

The Danfoss Design center

Discover the Design Center, our advanced digital platform that streamlines product selection. With integrated tools and enhanced type pages, it's simpler than ever to access product information and documentation, and to select the right products. Check the availability of Danfoss products at partner locations and enjoy seamless transitions from selection to purchase with our basket-to-basket functionality. Whether you're buying from our distributors or directly from the Product Store, the Design Center simplifies your experience. Learn more at: designcenter.danfoss.com.

The Danfoss product store

The Danfoss Product Store is a one-stop shop available 24/7 for our customers, no matter where you are in the world or what area of industry you work in. Browse our catalog, check product details and documentation, view your prices and product availability, and quickly finalize your purchase. Start browsing at: store.danfoss.com.

Danfoss Partner Portal/Product Data tool

Designed to support you with easy access to product data extracts, essential resources, tools, and information. The Partner Portal provides a centralized hub for product documentation, training materials, marketing assets, and technical support, ensuring you have everything you need to succeed and grow your business with Danfoss. The Partner Portal is available 24/7 at: partner.danfoss.com and is ready to support your business.

Find technical documentation

Find technical documentation you need to get your project up running. Get direct access to our official collection of data sheets, certificates and declarations, manuals and guides, 3D models and drawings, case stories, brochures, and much more. Start searching now at: documentation.danfoss.com.

Danfoss Learning

Danfoss Learning is a free online learning platform. It features courses and materials specifically designed to help engineers, installers, service technicians, and wholesalers better understand the products, applications industry topics, and trends that will help you do your job better. Find your local Danfoss website here: learning.danfoss.com.

Get local information and support

Local Danfoss websites are the main sources for help and information about our company and products. Find product availability, get the latest reginal news, or connect with a nearby expert - all in your own language. Find your local Danfoss website here: danfoss.com.

Danfoss A/S

Climate Solutions . danfoss.com . +45 7488 2222

Any information, including, but not limited to information on selection of product, its application or use, product design, weight, dimensions, capacity or any other technical data in product manuals, catalogues description, advertisements, etc. and whether made available in writing, orally, electronically, online or via download, shall be considered informative, and is only binding if and to the extent, explicit reference is made in a quotation or order confirmation. Danfoss cannot accept any responsibility for possible errors in catalogues, brochures, videos and other material. Danfoss reserves the right to alter its products without notice. This also applies to products ordered but not delivered provided that such alterations can be made without changes to form, fit or function of the products. All trademarks in this material are property of Danfoss A/S or Danfoss group companies. Danfoss and the Danfoss logo are trademarks of Danfoss A/S. All rights reserved.