Gas Pressure Regulator

F Serie DN25-DN150





Main Features

Direct-acting F Serie Gas Pressure Regulators According to 2014/68/EU Directive, EN334 and EN 14382

- **Fail Open regulator**
- **Balanced valve**
- **Rugged construction for durability**
- **Wide pressure regulation range**
- **Full seal at zero flow**
- **Easy maintenance**
- **Optional minimum and/or maximum pressure slam-shut device**
- **Optional silencer internal and/or external**
- **With or Without SSV**
- **With electric position indicator SSV closed by an inductive proximity switch**
- **Internal Relief Valve**
- **Combined monitoring system**
- **Bypass system for to activate ssv easily**

Technical Features

Maximum allowable pressure –PS	20 bar
Inlet pressure range –bPu	DN up to 4'' 0.1 – 20 bar 6'' 0.1 – 10 bar
Outlet pressure range –Wd	DN up to 4'' 15 – 4400 mbar 6'' 15 – 2000 mbar*
Allowable temperature –TS[1]	-20 °C to +60 °C
Inlet gas temperature	-20 °C to +60 °C
Accuracy class –AC[2]	up to AC 5
Lock-up pressure class –SG[2]	up to SG 10
Nominal size –DN	DN25 1'' | DN40 11/2'' | DN50 2'' | DN65 21/2'' DN80 3'' | DN100 4'' | DN150 6''
Connections[3]	PN16, PN20 according to ISO 7005 Class 150 RF according to ASME B16.5 and

[1] Low temperature version -40°C: available on request
[2] Depending on working conditions
[3] On request for other connection class
* For higher outlet pressure, see the catalog of pilot controlled regulators.

Metarials

Body[1]	EN-GJS 500-7
Main Actuator[2]	Ø210 – 280 mm Aluminium cast alloys Ø 380 mm Cast steel Ø 520 mm Aluminium cast alloys
Seat[2]	DN up to 2'' Brass DN up to 21/2'' to 6'' Stainless Steel
Internal Parts[2]	Stainless steel and brass
Seals	NBR+canvas (powered by hot operation process)
Diaphragm	Synthetic rubber with fabric reinforcement

[1] A 216 WCB: available on request
[2] Other materials available on request

Standards and certificates

Applied directives:

Pressure Equipment Directive –PED (EU) EU/2014/68

Compliance with the regulations of the applied directives is verified by the adherence to the following standards / regulations:

- Gas pressure regulators for inlet pressure up to 100 bar EN 334:2019
- Gas safety shut-off devices for inlet pressures 100 bar EN 14382:2019
- EU Desing Examination Certificate 2195-PED-20081-T
- UkrSepro Tecnical Regulations for Pressure Equipment UA.TR.012C.0368

The relevant valid edition of the standards can be found in the declaration of conformity!

Use

General Gases :

Natural gas, town gas, propane, butane, air, nitrogen or all non-corrosive gases

Suitable for use with previously filtered gaseous fluids, it is mainly used for medium and low pressure natural gas distribution networks. Biogas resistant up to 0.1% H2S dry for standard version.

Hydrogen Ready :

Suitability of natural gas-hydrogen mixtures or pure hydrogen.
When using the F series, a manufacturer's declaration and nofied body reports can be provided on request.

Biogas or Biomethane Version :

Suitable for biogases and recycling gases
– up to maximum 1% by volume H2S, dry
– up to maximum 1% by volume NH3,
dry No non-ferrous metals (except in very small quantities found in the plastic components)

Biogas version of F Series are also designed for slightly aggressive, dry gases.

Gases according such as biogases, landfill gases, sewage gases, other recycled gases, process gases, and air. The chemical composition and aggressiveness of each biogas or recycled gas is different, not constant, and dependent on several factors.

The aggressiveness of the gas notably increases:
- as the hydrogen sulfide content H2S increases
- with the moisture content of the gas, condensation is not permitted inside the regulator

In consultation with Gastech, users must decide whether the materials used for the F Series are suitable for the intended types of recycling gas. These gases can vary in terms of both their composition and the respective concentration of the components.

As a result, it is not possible to make any warranties or definitive statements regarding service life. An assessment should be carried out to determine the suitability of the gas used.

⚠ For safety reasons, we strongly recommend
- the installation of a safety relief Valve and SSV device
- a visual inspection of the F Serie regulator at intervals of 3 to 6 months
- Function and leakage tests

Desing,
Operational Diagram

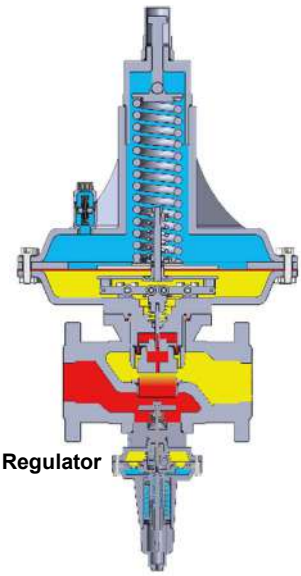

Gas Pressure Regulator
DN25 – 1''
DN40 – 11/2''
DN50 – 2''

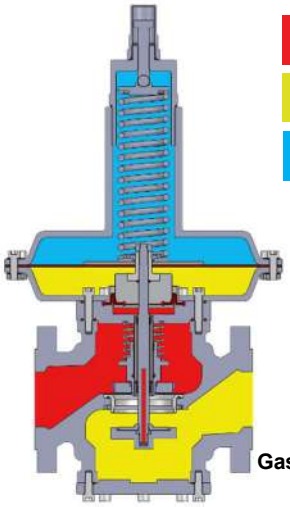

Gas Pressure Regulator
DN65 –2$_{1/2}$''
DN80 – 3''
DN100 – 4''
DN150 – 6''

Configurations



Gas Pressure Regulator

F65-150



Gas Pressure Regulator
with Slum Shut Valve
F65-150/S Serie

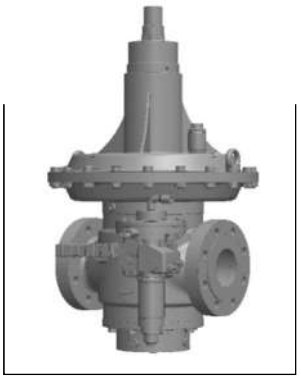

Gas Pressure Regulator
with Slum Shut Valve + Monitor
F65-150M/S Serie



Gas Pressure Regulator

F25-50



Gas Pressure Regulator
with Slum Shut Valve
F25-50/S Serie



Gas Pressure Regulator
with Slum Shut Valve + Monitor
F25-50M/S Serie

Slum Shut Valve

The F series of regulators can be fitted with safety shut-off valve for overpressure (OPSO) or combined under-and-over pressure (UPSO/OPSO) protection. Shutoff gas flow when the outlet pressure of the regulator increases or/and decreases. The Slum shut valve trip pressure can easily be adjusted independently of the regulator set point. Built internal bypass, for balancing pressure before relatching the safety shut-off valve, is operated by pulling the valve stem. Possibility of application of devices for remote signal and remote control.

Technical Features

Type	IS
Operation class	A
Response time	< 2 s
Allowable temperature –TS[1]	-20 °C to +60 °C
Accuracy –AG[2]	up to 0.05 bar AG 30 0.05 – 0.15 bar AG 10 0.15 – 5.5 bar AG 5
Set Range OPSO[3]	BP 20 -300mbar | MP 50 - 500mbar | AP 0.3 – 5.5bar
Set Range OPSO[3]	BP 10 -280mbar | MP 20 - 350mbar | AP 0.2 – 3.2bar

[1] Low temperature version -40°C: available on request
[2] Depending on working conditions
[3] change differant springs Refer to page

Slum Shut Unit for F Serie





Article No	Type	DN Size
2.80.0311	S-BP	DN25-40
2.80.0312	S-MP	DN25-40
2.80.0313	S-AP	DN25-40
2.80.0314	S-BP	DN50
2.80.0315	S-MP	DN50
2.80.0316	S-AP	DN50
2.80.0317	S-BP	DN65-80
2.80.0318	S-MP	DN65-80
2.80.0319	S-AP	DN65-80
2.80.0320	S-BP	DN100
2.80.0321	S-MP	DN100
2.80.0322	S-AP	DN100
2.80.0323	S-BP	DN150
2.80.0324	S-MP	DN150
2.80.0325	S-AP	DN150

Please, select the springs (OPSO and UPSO Range), Refer to Page 22 and 23

Monitor Unit

The Monitor or emergency regulator is used as a safety device in gas pressure reduction systems. The purpose of this device is to protect the system against possible overpressure, while keeping the reduction line in service. To perform a periodic test on a monitoring regulator, increase the outlet set pressure of the working regulator and watch the outlet pressure to determine if the monitoring regulator takes over at the appropriate outlet pressure.

Monitor regulator is generally installed upstream of the active regulator. Although the function of the monitor regulator is different, the two regulator s are virtually identical from the point of view of the ir mechanical components. Flow coefficients of the regulator puls line monitor system are about 15% lower than those of the active regulator alone.



Monitor Unit for F Serie

Article No	Type	DN Size
2.80.0420	M-BP/MP/AP	DN25-40
2.80.0421	M-BP/MP/AP	DN50
2.80.0422	M-BP/MP/AP	DN65-80
2.80.0423	M-BP/MP/AP	DN100
2.80.0424	M-BP/MP/AP	DN150

In order for the standard regulator to be a monitor regulator, it is necessary to add a few mechanical parts. This attachment is directly integrated into the body of the monitor regulator. Figure below is focused on the monitor unit

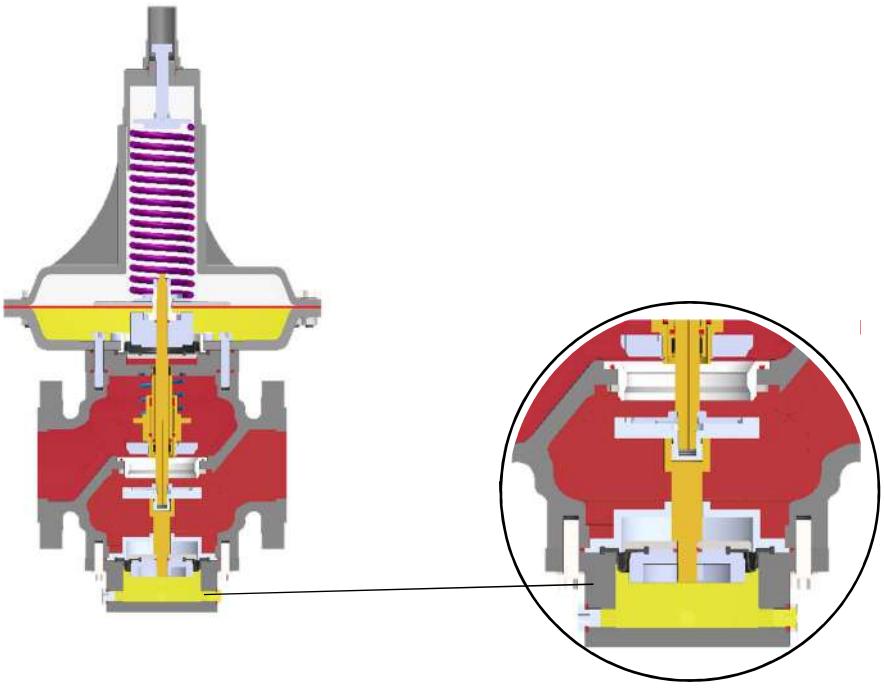

Monitor Unit for DN65 – 150

Silencer –INT

This silencer is fitted on the regulator orifice and is highly efficient up to a theoretical speed of 80 m/s calculated at the outlet flange.

Type int silincer multi-path noise abatement device is incorporated into the regulator on the seat area. It consists of plated Stainless steel metals containing no sound deadening materials.

Depending on flows and pressure drop, the silencer can reduce noise levels as much as 15 dB (A) with an approximate 3% capacity reduction.

Silencer Unit for F Serie



Article No	Type	DN Size
2.80.0580	M-BP/MP/AP	DN25-40
2.80.0581	M-BP/MP/AP	DN50
2.80.0582	M-BP/MP/AP	DN65-80
2.80.0583	M-BP/MP/AP	DN100
2.80.0584	M-BP/MP/AP	DN150

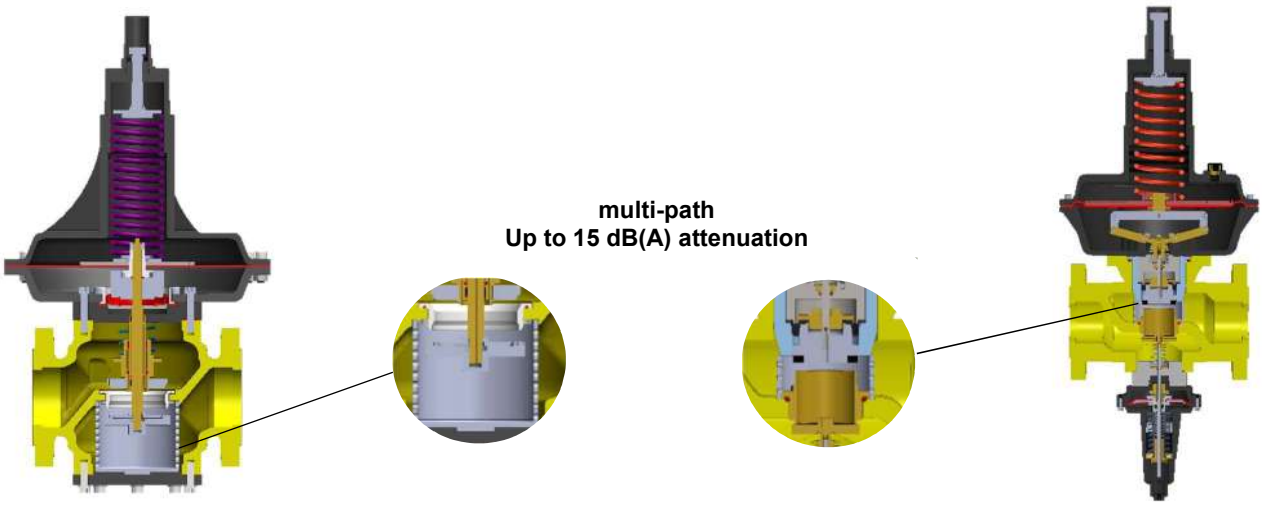

Performance of Silencer

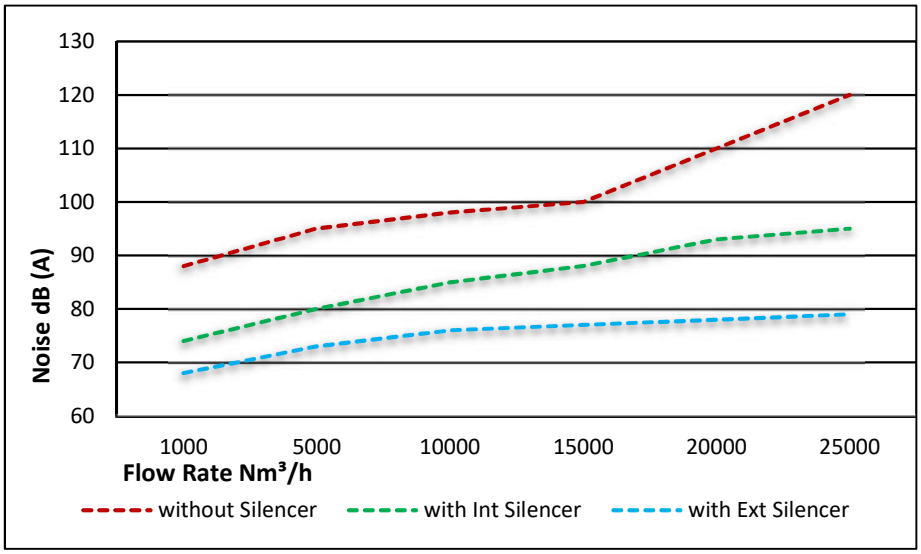

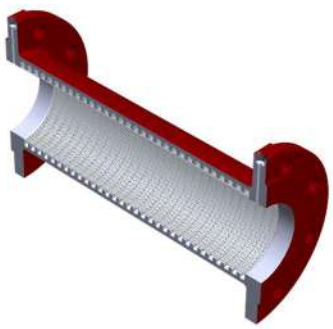

Ext Silencer

Accessories
(to be ordered separately)



Switch for SSV of F Serie - EExd II CT6 - IP65

Article No	Type	DN Size
2.80.0622	M-BP/MP/AP	DN25-40-50
2.80.0623	M-BP/MP/AP	DN65-80-100-150



Switch for SSV of F Serie - **EN 50041 - IP66**

Article No	Type	DN Size
2.80.0624	M-BP/MP/AP	DN25-40-50
2.80.0625	M-BP/MP/AP	DN65-80-100-150



3 way solenoid valve for SSV of F Serie -EExd II CT6 - IP65

Article No	Type	DN Size
2.80.0699	M-BP/MP/AP	DN25-40-50-65-80-100-150

Pnömatic Actuator for F Serie –Air supplay pressure 2-6bar



Article No	Type	DN Size
2.80.1143	N.O or NC	DN25 – 40
2.80.1144	N.O or NC	DN50
2.80.1145	N.O or NC	DN65 – 80
2.80.1146	N.O or NC	DN100
2.80.1147	N.O or NC	DN150



Sensing Line Kit for F Serie

Article No	Type	DN Size
2.80.1122	All Type	All size

⚠ Consisting of: 2pcs x 1mt dia.10mm steel pipe – 2pcs x pipe connection for 10 mm dia. ¼''

Flow Calculations

For a 0.6 specific gravity gas, sizing of regulators is usually made on the basis of Cg valve and KG flow rate coeffcients . Flow rates at the fully open position and the various operating conditions are related by the following formula

Sub-critical flow behaviour (Pu -Pd) ≤ 0.5 Pu

$$Q = 0{,}52\ x\ Cg\ x\ Pu\ x\ sen\left(K1\ x\ \sqrt{\frac{Pu-Pd}{Pd}}\right) \qquad Q = KG \times \sqrt{Pd\ x\ (Pu-Pd)}$$

Critical flow behaviour (Pu -Pd) > 0.5 Pu

$$Q = 0{,}52\ x\ Cg\ x\ Pu \qquad Q = \frac{KG}{2}\ x\ Pu$$

Acronyms

Q	volumetric flow rate in (m3 /h)
Pu	absolute inlet pressure in (bar)
Pd	absolute outlet pressure in (bar)

Flow rate coefficient

Size	25 | 1''	40 | 1 1/2''	50 | 2''	50H | 2''H	65 | 2 1/2''	80 | 3''	100 | 4''	150 | 6''
Cg	270	650	780	1350	2240	3390	4423	10620
K_G	284	683	820	1404	2356	3564	4648	11170

Select the diameter of the regulator with Cg higher than calculated value .
After finding the DN of the regulator, check that gas speed on the seat does not exceed 100 m/sec, using the following formula:

$$V = 345.92\ x\ \frac{Q}{DN^2}\ x\ \frac{1-0.002\ x\ Pd}{1+Pd}$$

V	Velocity (m/s)
345.92	Numerical constant
Q	Flow rate under standard conditions (Stm3/h)
DN	Regulator nominal diameter (mm)
Pd	absolute outlet pressure in (bar)

Correction factor for non-natural gas applications

The flow rates are indicated for a 0.6 specific gravity gas. To determine the volumetric flow rate for gases other than natural gas, multiply or calculate the values in the capacity tables using the sizing equations with a correction factor. The table below lists correction factors for some common gases:

Gas Type	Density ratio to air	Conversion factor
Air	1.00	0.77
Butane	2.00	0.55
Propane	1.52	0,63
Propane+Air Mix	1.2	0,71
Hydrogen	0.07	2.94
Nitrogen	0.97	0.79
Carbondioxide	1.52	0.63

Use the following formula to calculate the correction factor for gases not listed above. In the formula, d is the specific gravity of the gas.

Conversion factor = $\sqrt{\frac{0.6}{d}}$

	Stm3 /h /hreference conditions 15 °C, 1 barg
Stm3 /h x 0.94795 = Nm3 /h	Nm3 /h reference conditions 0 °C, 1 barg

Capacity Tables

F 25 – DN25 – 1'' AC 5

Inlet pressure (bar)	Outlet Pressure (mbar)								
	Actuator 280 Ø					Actuator 210 Ø			
	20	50	80	100	300	500	1000	2000	4000
0.5	171	168	167	166	153	-	-	-	-
1	256	253	252	251	234	187	-	-	-
2	408	405	404	402	394	347	341	-	-
3	545	542	542	541	536	542	542	-	-
4	610	607	606	605	599	685	679	597	-
6	610	607	606	605	599	968	996	910	1243
8	610	607	606	605	599	968	996	910	1243
10	610	607	606	605	599	968	996	1474	1601
12	610	607	606	605	599	968	996	1474	1601
16	610	607	606	605	599	968	996	1474	1601
20	610	607	606	605	599	968	996	1474	1601

F 25 – DN25 – 1'' AC 10

Inlet pressure (bar)	Outlet Pressure (mbar)								
	Actuator 280 Ø					Actuator 210 Ø			
	20	50	80	100	300	500	1000	2000	4000
0.5	223	220	219	217	200	-	-	-	-
1	335	331	330	329	306	245	-	-	-
2	534	530	528	526	516	454	446	-	-
3	713	710	709	708	702	709	709	-	-
4	798	794	793	792	784	896	889	781	-
6	798	794	793	792	784	1267	1303	1192	1627
8	798	794	793	792	784	1267	1303	1192	1627
10	798	794	793	792	784	1267	1303	1930	2095
12	798	794	793	792	784	1267	1303	1930	2095
16	798	794	793	792	784	1267	1303	1930	2095
20	798	794	793	792	784	1267	1303	1930	2095

⚠ In order to limit the noise emission it is recommended not to exceed a gas velocity of 100 m/s at the regulator outlet. The reason why the flow rates repeat without increasing at high inlet pressure is the high sound emission and high gas velocities. Not recommended for use even though regulators provide higher capacities.

Capacity Tables

F 40 – DN40 – 11/2'' AC 5

Inlet pressure (bar)	Outlet Pressure (mbar)								
	Actuator 280 Ø					Actuator 210 Ø			
	20	50	80	100	300	500	1000	2000	4000
0.5	313	309	307	305	281	-	-	-	-
1	470	465	464	462	429	343	-	-	-
2	749	743	741	737	724	636	626	-	-
3	1000	996	995	993	985	995	995	-	-
4	1120	1114	1112	1111	1100	1257	1247	1096	-
6	1120	1114	1112	1111	1100	1778	1828	1672	2283
8	1120	1114	1112	1111	1100	1778	1828	1672	2283
10	1120	1114	1112	1111	1100	1778	1828	2707	2939
12	1120	1114	1112	1111	1100	1778	1828	2707	2939
16	1120	1114	1112	1111	1100	1778	1828	2707	2939
20	1120	1114	1112	1111	1100	1778	1828	2707	2939

F 40 – DN40 – 11/2'' AC 10

Inlet pressure (bar)	Outlet Pressure (mbar)								
	Actuator 280 Ø					Actuator 210 Ø			
	20	50	80	100	300	500	1000	2000	4000
0.5	360	355	353	350	322	-	-	-	-
1	539	534	532	530	493	394	-	-	-
2	861	854	851	847	832	731	719	-	-
3	1148	1144	1143	1140	1131	1143	1143	-	-
4	1286	1279	1277	1276	1263	1444	1433	1259	-
6	1286	1279	1277	1276	1263	2042	2100	1920	2622
8	1286	1279	1277	1276	1263	2042	2100	1920	2622
10	1286	1279	1277	1276	1263	2042	2100	3109	3376
12	1286	1279	1277	1276	1263	2042	2100	3109	3376
16	1286	1279	1277	1276	1263	2042	2100	3109	3376
20	1286	1279	1277	1276	1263	2042	2100	3109	3376

⚠ In order to limit the noise emission it is recommended not to exceed a gas velocity of 100 m/s at the regulator outlet. The reason why the flow rates repeat without increasing at high inlet pressure is the high sound emission and high gas velocities. Not recommended for use even though regulators provide higher capacities.

Capacity Tables

F 50 – DN50 – 2'' AC 5

Inlet pressure (bar)	Outlet Pressure (mbar)								
	Actuator 280 Ø					Actuator 210 Ø			
	20	50	80	100	300	500	1000	2000	4000
0.5	375	362	357	298	280	-	-	-	-
1	665	574	568	623	602	556	-	-	-
2	940	932	931	1075	1090	968	890	-	-
3	1110	1101	1098	1441	1455	1340	1452	899	-
4	1110	1101	1098	1804	1816	1815	1815	1480	-
6	1110	1101	1098	1804	1816	1940	2190	2014	2068
8	1110	1101	1098	1804	1816	1790	2355	3415	3560
10	1110	1101	1098	1804	1816	1790	2355	3415	3840
12	1110	1101	1098	1804	1816	1790	2355	3415	4680
16	1110	1101	1098	1804	1816	1790	2355	3415	5540
20	1110	1101	1098	1804	1816	1790	2355	3415	5540

F 50 – DN50 – 2'' AC 10

Inlet pressure (bar)	Outlet Pressure (mbar)								
	Actuator 280 Ø					Actuator 210 Ø			
	20	50	80	100	300	500	1000	2000	4000
0.5	402	422	469	530	460	-	-	-	-
1	690	706	784	837	810	793	-	-	-
2	1180	1211	1346	1513	1130	1280	1400	-	-
3	1510	1552	1724	1940	1645	1810	1917	1952	-
4	1790	1816	2018	2250	1930	2205	2440	2790	-
6	1790	1816	2018	2250	3140	3215	3300	3490	3650
8	1790	1816	2018	2250	3140	3215	3300	4200	4940
10	1790	1816	2018	2250	3140	3215	3300	4200	4940
12	1790	1816	2018	2250	3140	3215	3300	4200	4940
16	1790	1816	2018	2250	3140	3215	3300	4200	4940
20	1790	1816	2018	2250	3140	3215	3300	4200	4940

⚠ In order to limit the noise emission it is recommended not to exceed a gas velocity of 100 m/s at the regulator outlet. The reason why the flow rates repeat without increasing at high inlet pressure is the high sound emission and high gas velocities. Not recommended for use even though regulators provide higher capacities.

Capacity Tables

F 50 H– DN50 – 2'' AC 5

Inlet pressure (bar)	Outlet Pressure (mbar)								
	Actuator 380 Ø					Actuator 380 Ø AP			
	20	50	80	100	300	500	1000	2000	4000
0.5	670	695	652	603	462	-	-	-	-
1	755	775	1101	930	1040	850	-	-	-
2	988	1020	1180	1270	1520	1764	1550	-	-
3	1387	1480	1560	1890	2200	2207	2350	1573	-
4	1420	1510	2050	2210	2280	2207	2930	2939	-
6	1535	1565	2204	2450	2650	2207	2930	2939	2878
8	1535	1565	2204	2450	2680	2207	2930	2939	4130
10	1535	1565	2204	2450	2680	2207	2930	2939	5388
12	1535	1565	2204	2450	2680	2207	2930	2939	6368
16	1535	1565	2204	2450	2680	2207	2930	2939	7074
20	1535	1565	2204	2450	2680	2207	2930	2939	7974

F 50 H – DN50 – 2'' AC 10

Inlet pressure (bar)	Outlet Pressure (mbar)								
	Actuator 380 Ø					Actuator 380 Ø AP -AAP			
	20	50	80	100	300	500	1000	2000	4000
0.5	798	803	835	792	767	-	-	-	-
1	1005	1008	1285	1288	1294	1010	-	-	-
2	1225	1285	1320	1440	1620	1940	2200	-	-
3	1860	1910	1960	2050	2330	2450	2600	3150	-
4	1980	2240	2505	2800	2550	3100	3780	4070	-
6	2039	2460	2620	2860	3140	3950	5140	5100	5020
8	2170	2610	2710	2910	3310	4300	5950	5980	5640
10	2280	2850	2830	2970	3440	4330	6030	6650	7250
12	2370	2930	2930	3020	3500	4345	6045	7215	8890
16	2430	3070	3005	3040	3580	4360	6045	7920	10200
20	2610	3230	3010	3050	3645	4360	6060	8330	11070

⚠ In order to limit the noise emission it is recommended not to exceed a gas velocity of 100 m/s at the regulator outlet. The reason why the flow rates repeat without increasing at high inlet pressure is the high sound emission and high gas velocities. Not recommended for use even though regulators provide higher capacities.

Capacity Tables

F 65 – DN65 – 21/2'' AC 5

Inlet pressure (bar)	Outlet Pressure (mbar)								
	Actuator 380 Ø					Actuator 380 Ø AP -AAP			
	20	50	80	100	300	500	1000	2000	4000
0.5	1533	1533	1499	1499	1115	-	-	-	-
1	2021	2300	2091	2091	2161	2021	-	-	-
2	3485	3555	3580	3203	3624	3485	2778	-	-
3	3485	3555	3580	3203	4809	4531	3973	3834	-
4	3485	4182	3834	3805	5158	5576	4892	5576	-
6	3485	4531	3973	3915	5715	6970	5925	8364	5018
8	3485	4531	3973	3590	6552	7179	7040	10455	10107
10	3485	4531	3973	3694	6552	7179	8364	13243	13243
12	3485	4531	3973	3694	6552	7179	8364	13243	15334
16	3485	4531	3973	3694	6552	7179	11152	13940	17425
20	3485	4531	3973	3694	6552	7179	11152	13940	17425

F 65 – DN65 – 21/2'' AC 10

Inlet pressure (bar)	Outlet Pressure (mbar)								
	Actuator 380 Ø					Actuator 380 Ø AP -AAP			
	20	50	80	100	300	500	1000	2000	4000
0.5	1822	1822	1781	1781	1325	-	-	-	-
1	2402	2733	2485	2485	2567	2402	-	-	-
2	4141	4224	4254	3806	4307	4141	3301	-	-
3	4141	4224	4254	3806	5715	5383	4721	4555	-
4	4141	4969	4555	4521	6129	6626	5813	6626	-
6	4141	5383	4721	4652	6791	8282	7040	9938	5963
8	4141	5383	4721	4266	7785	8530	8365	12423	12009
10	4141	5383	4721	4389	7785	8530	9938	15736	15736
12	4141	5383	4721	4389	7785	8530	9938	15736	18220
16	4141	5383	4721	4389	7785	8530	13251	16564	20705
20	4141	5383	4721	4389	7785	8530	13251	16564	20705

⚠ In order to limit the noise emission it is recommended not to exceed a gas velocity of 100 m/s at the regulator outlet. The reason why the flow rates repeat without increasing at high inlet pressure is the high sound emission and high gas velocities. Not recommended for use even though regulators provide higher capacities.

Capacity Tables

F 80 – DN80 – 3'' AC 5

Inlet pressure (bar)	Outlet Pressure (mbar)								
	Actuator 380 Ø					Actuator 380 Ø AP -AAP			
	20	50	80	100	300	500	1000	2000	4000
0.5	1814	1814	1773	1773	1319	-	-	-	-
1	2391	2721	2474	2474	2556	2391	-	-	-
2	4123	4205	4235	3788	4287	4123	3285	-	-
3	4123	4205	4235	3788	5689	5359	4700	4535	-
4	4123	4947	4535	4501	6101	6596	5786	6596	-
6	4123	5359	4700	4631	6761	8245	7008	9894	5936
8	4123	5359	4700	4247	7750	8492	8327	12368	11955
10	4123	5359	4700	4370	7750	8492	9894	15666	15666
12	4123	5359	4700	4370	7750	8492	9894	15666	18139
16	4123	5359	4700	4370	7750	8492	13192	16490	20613
20	4123	5359	4700	4370	7750	8492	13192	16490	20613

F 80 – DN80 – 3'' AC 10

Inlet pressure (bar)	Outlet Pressure (mbar)								
	Actuator 380 Ø					Actuator 380 Ø AP -AAP			
	20	50	80	100	300	500	1000	2000	4000
0.5	2134	2134	2086	2086	1552	-	-	-	-
1	2813	3201	2910	2910	3007	2813	-	-	-
2	4850	4947	4982	4457	5044	4850	3865	-	-
3	4850	4947	4982	4457	6693	6305	5529	5335	-
4	4850	5820	5335	5295	7178	7760	6807	7760	-
6	4850	6305	5529	5448	7954	9700	8245	11640	6984
8	4850	6305	5529	4996	9118	9991	9797	14550	14065
10	4850	6305	5529	5141	9118	9991	11640	18430	18430
12	4850	6305	5529	5141	9118	9991	11640	18430	21340
16	4850	6305	5529	5141	9118	9991	15520	19400	24250
20	4850	6305	5529	5141	9118	9991	15520	19400	24250

⚠ In order to limit the noise emission it is recommended not to exceed a gas velocity of 100 m/s at the regulator outlet. The reason why the flow rates repeat without increasing at high inlet pressure is the high sound emission and high gas velocities. Not recommended for use even though regulators provide higher capacities.

Capacity Tables

F 100 – DN100 – 4'' AC 5

Inlet pressure (bar)	Outlet Pressure (mbar)								
	Actuator 520 Ø					Actuator 380 Ø AP -AAP			
	20	50	80	100	300	500	1000	2000	4000
0.5	2720	2788	2525	2593	1998	-	-	-	-
1	3570	4216	3783	4165	3740	4080	-	-	-
2	5644	6311	5933	5840	6333	6460	6290	-	-
3	5644	6970	6290	6630	6885	7820	7650	7650	-
4	5644	7540	6643	7480	7480	9690	9350	9350	-
6	5644	7540	6885	7480	8883	13345	11900	14450	14450
8	5644	7540	7565	7480	8883	14110	14620	17000	19550
10	5644	7540	7565	7480	8883	14110	14620	17000	23800
12	5644	7540	7565	7480	8883	14110	14620	17000	27030
16	5644	7540	7565	7480	8883	14110	14620	17000	27030
20	5644	7540	7565	7480	8883	14110	14620	17000	27030

F 100 – DN100 – 4'' AC 10

Inlet pressure (bar)	**Outlet Pressure (mbar)**								
	Actuator 520 Ø					**Actuator 380 Ø AP -AAP**			
	20	**50**	**80**	**100**	**300**	**500**	**1000**	**2000**	**4000**
0.5	3232	3313	3000	3081	2374	-	-	-	-
1	4242	5010	4495	4949	4444	4848	-	-	-
2	6706	7499	7050	6939	7525	7676	7474	-	-
3	6706	8282	7474	7878	8181	9292	9090	9090	-
4	6706	8959	7893	8888	8888	11514	11110	11110	-
6	6706	8959	8181	8888	10555	15857	14140	17170	17170
8	6706	8959	8989	8888	10555	16766	17372	20200	23230
10	6706	8959	8989	8888	10555	16766	17372	20200	28280
12	6706	8959	8989	8888	10555	16766	17372	20200	32118
16	6706	8959	8989	8888	10555	16766	17372	20200	32118
20	6706	8959	8989	8888	10555	16766	17372	20200	32118

⚠ In order to limit the noise emission it is recommended not to exceed a gas velocity of 100 m/s at the regulator outlet. The reason why the flow rates repeat without increasing at high inlet pressure is the high sound emission and high gas velocities. Not recommended for use even though regulators provide higher capacities.

Capacity Tables

F 150 – DN150 – 6'' AC 5

Inlet pressure (bar)	Outlet Pressure (mbar)								
	Actuator 520 Ø					Actuator 520 Ø AP			
	20	50	80	100	300	500	1000	2000	4000
0.5	2048	2028	2028	4180	3172	-	-	-	-
1	2691	2665	2659	5915	6305	5317	-	-	-
2	4485	4466	4466	9165	10270	9815	7345	-	-
3	4940	4960	4979	10140	11765	13130	12870	10660	-
4	5265	5408	5421	11245	15080	17115	15015	14495	-
6	5337	5421	5421	11466	15795	21190	17290	22425	-
8	5389	5428	5571	11635	18395	21515	20280	26780	-
10	5467	5499	5499	11798	18590	22620	20410	28340	-
12	-	-	-	-	-	-	-	-	-
16	-	-	-	-	-	-	-	-	-
20	-	-	-	-	-	-	-	-	-

F 150 – DN150 – 6'' AC 10

Inlet pressure (bar)	Outlet Pressure (mbar)								
	Actuator 520 Ø					Actuator 520Ø AP			
	20	50	80	100	300	500	1000	2000	4000
0.5	3182	3151	3151	6494	4929	-	-	-	-
1	4181	4141	4131	9191	9797	8262	-	-	-
2	6969	6939	6939	14241	15958	15251	11413	-	-
3	7676	7706	7737	15756	18281	20402	19998	16564	-
4	8181	8403	8423	17473	23432	26593	23331	22523	-
6	8292	8423	8423	17816	24543	32926	26866	34845	-
8	8373	8434	8656	18079	28583	33431	31512	41612	-
10	8494	8545	8545	18332	28886	35148	31714	44036	-
12	-	-	-	-	-	-	-	-	-
16	-	-	-	-	-	-	-	-	-
20	-	-	-	-	-	-	-	-	-

⚠ In order to limit the noise emission it is recommended not to exceed a gas velocity of 100 m/s at the regulator outlet. The reason why the flow rates repeat without increasing at high inlet pressure is the high sound emission and high gas velocities. Not recommended for use even though regulators provide higher capacities.

Dimensions and Weights

F Serie -without SSV

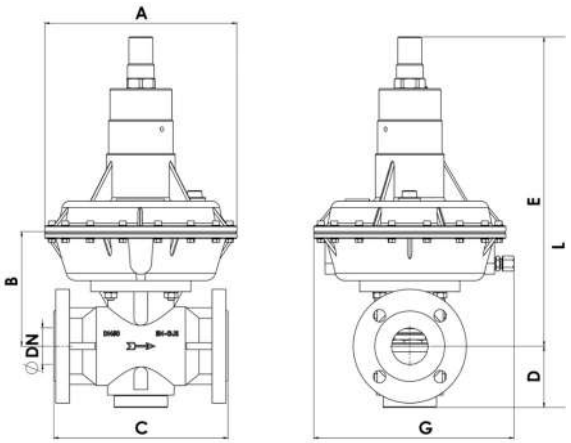

DN 25 – 40 – 50

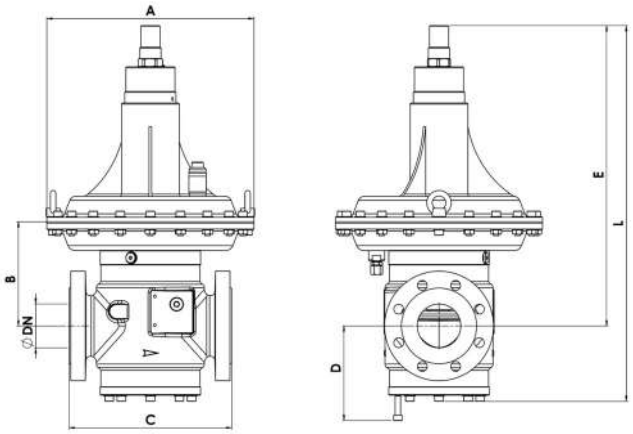

DN 65 – 80 – 100 - 150

DN[1]	A	B	C	D	E	F	G	L	**Wgt** kg
25 | 1''	210	145	222	80	400	-	215	475	22
25 | 1''	280	155	222	80	440	-	290	520	24
40 | 11/2''	210	145	222	80	400	-	215	475	22
40 | 11/2''	280	155	222	80	440	-	290	520	25
50 | 2''	210	166	254	90	450	-	220	520	29
50 | 2''	280	166	254	90	450	-	290	540	30
50 | 2''	380	190	254	90	530	-	-	620	59
65 | 21/2''	380	190	298	175	560	-	-	700	75
65 | 21/2''	380	207	298	175	640	-	-	780	82
80 | 3''	380	190	298	175	560	-	-	700	77
80 | 3''	380	207	298	175	640	-	-	780	84
100 | 4''	380	190	352	175	560	-	-	700	92
100 | 4''	520	207	352	175	640	-	-	780	105
150 | 6''	520	270	451	220	700	-	-	850	165
150 | 6''	520	270	451	220	700	-	-	850	185

Int silencer does not affect dimensions
Flange holes on DN25 size are threaded M12x1,75
Flange holes on DN65 size are threaded M16x2,0

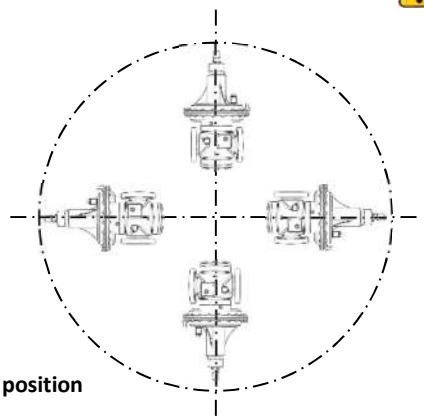

Mounting position

Dimensions and Weights

F Serie -with SSV

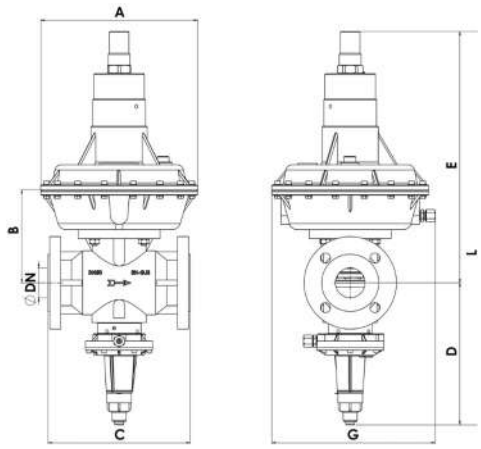

DN 25 – 40 – 50

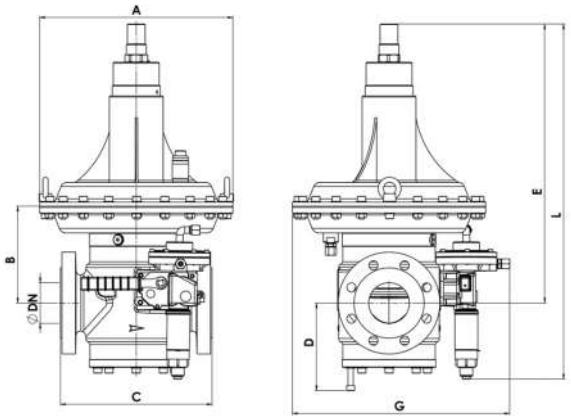

DN 65 – 80 – 100 - 150

DN[1]	A	B	C	D	E	F	G	L	**Wgt** kg
25 | 1''	210	145	222	245	400	-	215	640	24
25 | 1''	280	155	222	245	440	-	290	680	26
40 | 11/2''	210	145	222	245	400	-	215	640	24
40 | 11/2''	280	155	222	245	440	-	290	680	26
50 | 2''	210	166	254	260	450	-	220	690	31
50 | 2''	280	166	254	260	450	-	290	700	32
50 | 2''	380	190	254	260	530	-	380	790	51
65 | 21/2''	380	190	298	175	560	-	400	700	77
65 | 21/2''	380	207	298	175	640	-	520	780	85
80 | 3''	380	190	298	175	560	-	400	700	80
80 | 3''	380	207	298	175	640	-	520	780	87
100 | 4''	380	190	352	175	560	-	430	700	95
100 | 4''	520	207	352	175	640	-	520	780	108
150 | 6''	520	270	451	220	700	-	520	850	168
150 | 6''	520	270	451	220	700	-	520	850	188

Int silencer does not affect dimensions
Flange holes on DN25 size are threaded M12x1,75
Flange holes on DN65 size are threaded M16x2,0

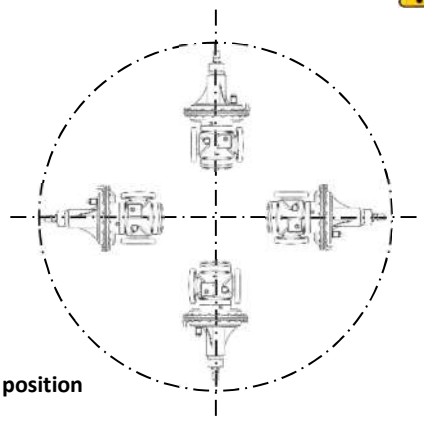

Mounting position

Dimensions and Weights

F Serie –with monitor unit, witout ssv

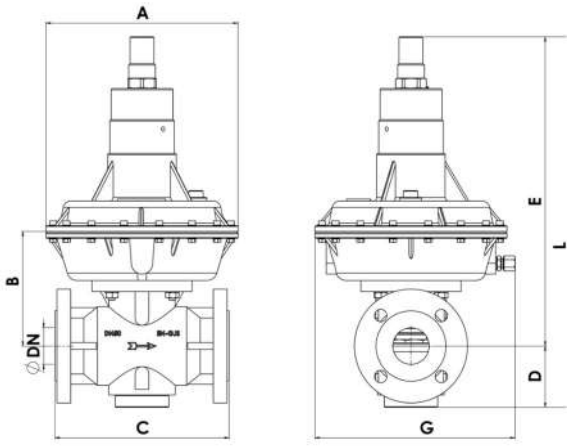

DN 25 – 40 – 50

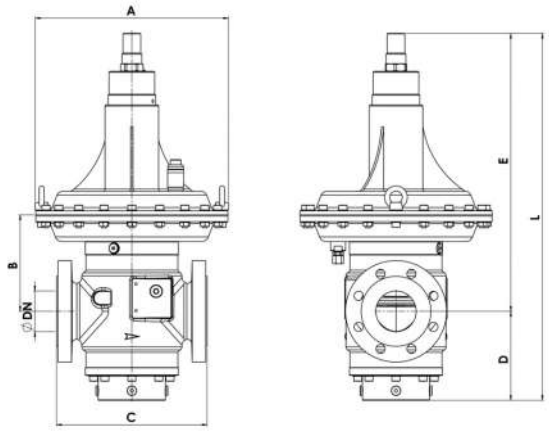

DN 65 – 80 – 100 - 150

DN[1]	A	B	C	D	E	F	G	L	**Wgt** kg
25 | 1''	210	145	222	80	400	-	215	475	22
25 | 1''	280	155	222	80	440	-	290	520	24
40 | 11/2''	210	145	222	80	400	-	215	475	22
40 | 11/2''	280	155	222	80	440	-	290	520	25
50 | 2''	210	166	254	90	450	-	220	520	29
50 | 2''	280	166	254	90	450	-	290	540	30
50 | 2''	380	190	254	90	530	-	-	620	59
65 | 21/2''	380	190	298	175	560	-	-	730	79
65 | 21/2''	380	207	298	175	640	-	-	820	86
80 | 3''	380	190	298	175	560	-	-	730	81
80 | 3''	380	207	298	175	640	-	-	820	88
100 | 4''	380	190	352	175	560	-	-	730	96
100 | 4''	520	207	352	175	640	-	-	820	108
150 | 6''	520	270	451	220	700	-	-	890	169
150 | 6''	520	270	451	220	700	-	-	890	189

Int silencer does not affect dimensions
Flange holes on DN25 size are threaded M12x1,75
Flange holes on DN65 size are threaded M16x2,0

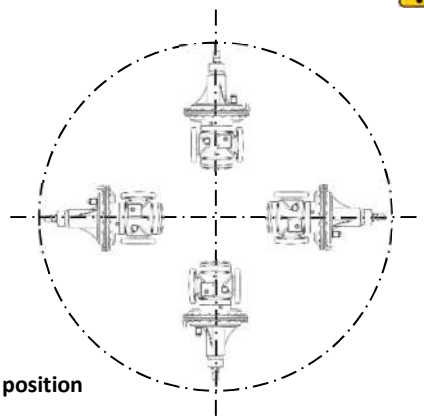

Mounting position

Dimensions and Weights

F Serie –with SSV + monitor unit

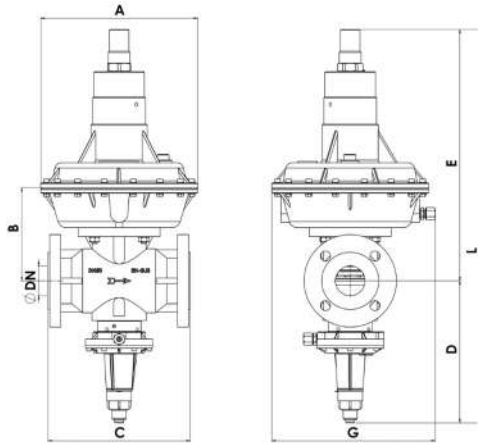

DN 25 – 40 – 50

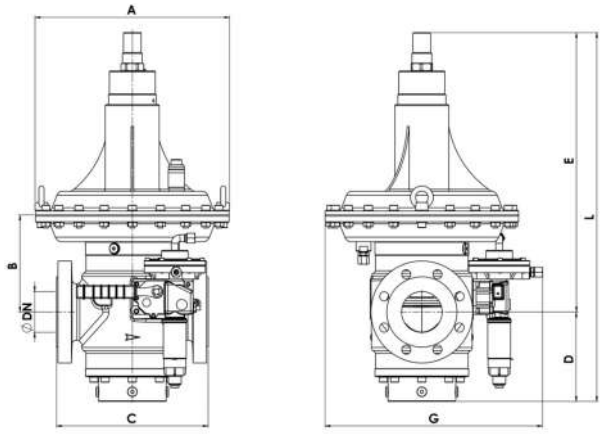

DN 65 – 80 – 100 - 150

DN[1]	A	B	C	D	E	F	G	L	**Wgt** kg
25 | 1''	210	145	222	245	400	-	215	640	24
25 | 1''	280	155	222	245	440	-	290	680	26
40 | 11/2''	210	145	222	245	400	-	215	640	24
40 | 11/2''	280	155	222	245	440	-	290	680	26
50 | 2''	210	166	254	260	450	-	220	690	31
50 | 2''	280	166	254	260	450	-	290	700	32
50 | 2''	380	190	254	260	530	-	380	790	51
65 | 21/2''	380	190	298	175	560	-	400	730	82
65 | 21/2''	380	207	298	175	640	-	520	820	89
80 | 3''	380	190	298	175	560	-	400	730	84
80 | 3''	380	207	298	175	640	-	520	820	92
100 | 4''	380	190	352	175	560	-	430	730	101
100 | 4''	520	207	352	175	640	-	520	820	104
150 | 6''	520	270	451	220	700	-	520	890	174
150 | 6''	520	270	451	220	700	-	520	890	195

Int silencer does not affect dimensions
Flange holes on DN25 size are threaded M12x1,75
Flange holes on DN65 size are threaded M16x2,0

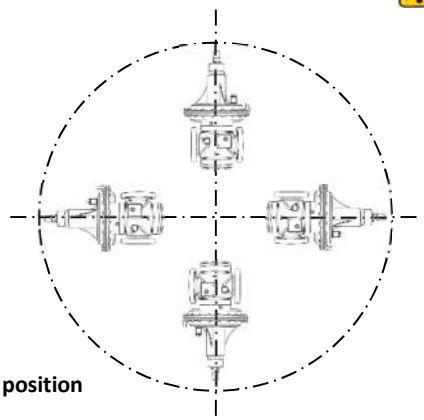

Mounting position

Outlet Pressure Range and Setting Springs

The spring setting ranges for the F25 – F40 – F50 regulator are shown in the tables below

Pressure Range (mbar)	Actuator (ø)	Color	Diameter (mm)	Order Code
16 – 20	280 BP	Grey	3.5	2.13.0696
20 – 35	280 BP	Yellow	4.0	2.13.0670
30 – 50	280 BP	Blue	4.5	2.13.0281
50 – 80	280 BP	Black	5.0	2.13.0697
80 – 120	280 MP	Orange	5.5	2.13.0671
110 – 170	280 MP	Purple	6.0	2.13.0669
130 – 220	280 MP	Pink	6.5	2.13.0698
180 – 330	280 MP	Red	7.0	2.13.0594
200 – 350	280 MP	Green	7.5	2.13.0089
350 – 600	210 AP	Black	8.0	2.13.0695
600 – 1000	210 AP	Purple	9.0	2.13.0699
800 – 1600	210 AP	Grey	10.0	2.13.0412
1400 – 2400	210 AP	Pink	11.0	2.13.0662
2200 – 3600	210 AP	White	12.0	2.13.0700
3400 – 5000	210 AP	Orange	13.0	2.13.0414

The spring setting ranges for the F50SH – F65 – F80 regulator are shown in the tables below

Pressure Range (mbar)	Actuator (ø)	Color	Diameter (mm)	Order Code
20 – 50	380 BP	Pink+Black line	5.0	2.13.0740
40 – 70	380 BP	Grey	5.5	2.13.0706
70 – 120	380 MP	Blue	6.0	2.13.0741
110 – 170	380 MP	Yellow	7.0	2.13.0679
140 – 240	380 MP	Orange+Black l.	7.5	2.13.0692
190 – 330	380 MP	Purple	8.0	2.13.0287
300 – 530	380 MP	Green	9.0	2.13.0708
240 – 420	380 AP	Purple	8.0	2.13.0287
260 – 510	380 AP	Pink	8.5	2.13.0742
330 – 600	380 AP	Green	9.0	2.13.0708
600 – 990	380 AP	Black	10.0	2.13.0709
820 – 1600	380 AP	Silver	11.0	2.13.0312
1240 – 2220	380 AP	White	12.0	2.13.0710
2140 – 3650	380 AAP	Brown	13.0	2.13.0711
2350 – 4200	380 AAP	Orange	14.0	2.13.0322

Outlet Pressure Range and Setting Springs

The spring setting ranges for the F100 regulator are shown in the tables below

Pressure Range (mbar)	Actuator (ø)	Color	Diameter (mm)	Order Code
10 – 30	520 BP	Grey	7.5	2.13.9999
20 – 40	520 BP	Yellow	8.0	2.13.9998
40 – 60	520 BP	Blue	8.5	2.13.9997
50 – 100	520 BP	Black	9.0	2.13.9996
100 – 210	520 MP	Orange	10.0	2.13.9995
150 – 300	520 MP	Purple	11.0	2.13.9994
200 – 380	520 MP	Pink	12.0	2.13.9993
330 – 600	380 AP	Green	9.0	2.13.0708
600 – 990	380 AP	Black	10.0	2.13.0709
820 – 1600	380 AP	Silver	11.0	2.13.0312
1240 – 2220	380 AP	White	12.0	2.13.0710
2140 – 3650	380 AAP	Brown	13.0	2.13.0711
2350 – 4200	380 AAP	Orange	14.0	2.13.0322

The spring setting ranges for the F150 regulator are shown in the tables below

Pressure Range (mbar)	Actuator (ø)	Color	Diameter (mm)	Order Code
10 – 30	520 BP	Grey	7.5	2.13.9999
20 – 40	520 BP	Yellow	8.0	2.13.9998
40 – 60	520 BP	Blue	8.5	2.13.9997
50 – 100	520 BP	Black	9.0	2.13.9996
100 – 210	520 MP	Orange	10.0	2.13.9995
150 – 300	520 MP	Purple	11.0	2.13.9994
200 – 380	520 MP	Pink	12.0	2.13.9993
330 – 600	380 AP	Green	9.0	2.13.0708
600 – 990	380 AP	Black	10.0	2.13.0709
820 – 1600	380 AP	Silver	11.0	2.13.0312
1240 – 2220	380 AP	White	12.0	2.13.0710
2140 – 3650	380 AAP	Brown	13.0	2.13.0711
2350 – 4200	380 AAP	Orange	14.0	2.13.0322

Minimum difference between regulator and SSV settings (ΔPw):
BP-MP Model: 15% with a minimum difference of 10 mbar for UPSO, 20 mbar for OPSO
AP-AAP Model : 20% with a minimum difference of 40 mbar for UPSO, 40 mbar for OPSO

Color of Products

Standard Colors

The colors of the regulator parts are painted as follows.

Part	RAL Code	Color
Body PN16-20 according to ISO 7005	1021	
Body Class 150 RF according to ASME B16.5	3000	
Main Actuator All Versions	9005	
Slum Shut Covers All Versions	9005	

Optional Colors

You can choose one or more of the following colors.

Part	RAL Code	Color
All Parts	1021	
All Parts	3000	
All Parts	9005	
All Parts	6011	
All Parts	5010	

delivery times and price may vary in optional color options.

NOTES

For more information, contact your local sales representative or agency.

info@gastech.com.tr
www.gastech.com.tr
+90 286 501 55 11
gastech_naturalgas
www.linkedin.com/in/gastech-naturalgas-577b931a8/

GASTECH SANAYI VE TICARET ANONIM SIRKETI
Çanakkale Organize Sanayi Bölgesi, 1. Cadde No:28 17100
Merkez-Çanakkale-TURKEY
Chamber of Commerce Çanakkale, 9492
www.gastech.com.tr info@gastech.com.tr

All rights reserved. 01/2023.
The Gastech logo is a trademark and service mark of GASTECH AS. All other marks are the property of their prospective owners. Gastech™ is a mark owned by one of the companies in the GASTECH AS. Subject to changes and errors. The information given in this document only contains general descriptions and/or performance features which may not always specifically reflect those described, or which may undergo modification in the course of further development of the products. The requested performance features are binding only when they are expressly agreed upon in the concluded contract. GASTECH AS does not assume responsibility for the selection, use or maintenance of any product. Responsibility for proper selection, use and maintenance of any product remains solely with the purchaser.